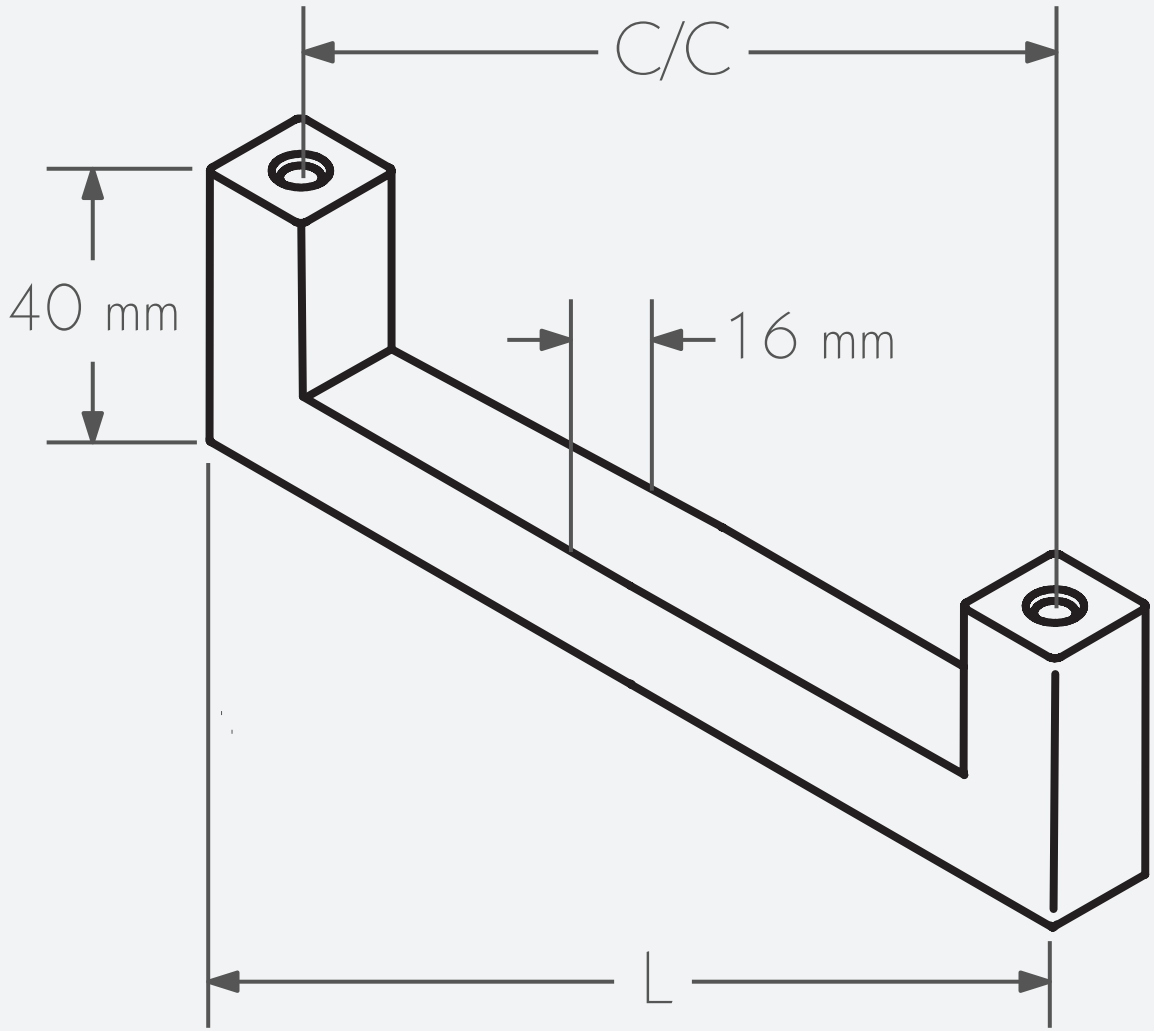

C/C:128mm; L:144mm
C/C:192mm; L:208mm
C/C:256mm; L:272mm
C/C:448mm; L:464mm
C/C:736mm; L:752mm