Assembly Instructions: **0305-BA3**

IMPORTANT:

- ALL INSTALLATION WORK SHOULD BE DONE BY ACCREDITED PROFESSIONAL.
- SHUT OFF POWER SUPPLY AT FUSE OR CIRCUIT BREAKER!
- USE ONLY THE SPECIFIED BULBS. DO NOT EXCEED THE MAXIMUM WATTAGE!

For Customer Service, contact the place of purchase to arrange for replacement parts.

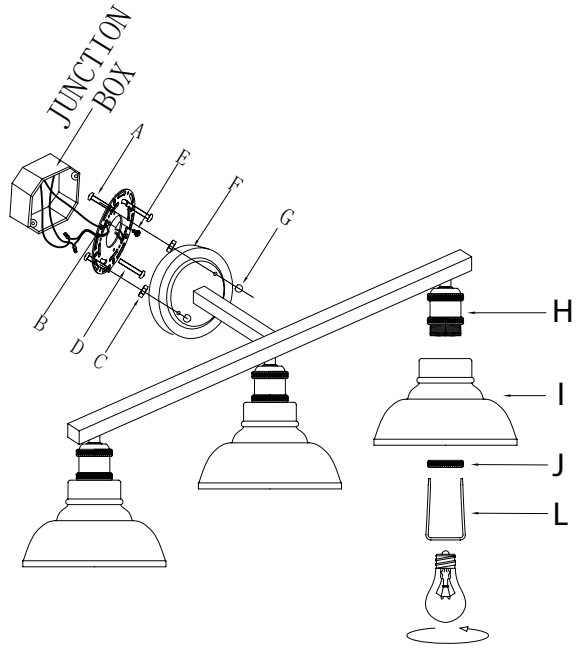

How to Identify the Fixture's Wires		
Hot	Neutral	Ground
Smooth	Ribbed	Bare Metal, Green, or Green Inner Thread
Black	White	
Black Inner Thread	White Inner Thread	

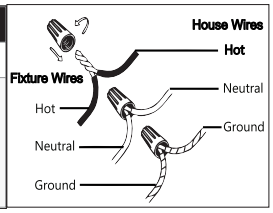

PREPARING FOR INSTALLATION

Remove all of the contents from the carton. See the important notes above. Shut off the power at the circuit breaker and completely remove the old fixture from the wall, including the old mounting strap.

1. Mounting strap (B) contains several pairs of threaded holes. Find the pair of holes that matches the spacing of the holes on the junction box and your fixture's backplate (F). Two of mounting screws (A & D) should be attached to mounting strap (B). You may need to tighten the nuts (C) that hold mounting screws (A) in place.

2. Pull the house wires through the center of mounting strap (B). Place mounting strap (B) over the junction box so that mounting screws (A) are horizontal, and in alignment with the hole locations on fixture backplate (F). Secure mounting strap (B) to the junction box with mounting screws (D) and a screwdriver. Tighten the screws securely.

CONNECTING THE WIRES

3. Have an assistant support the fixture's weight while completing the wiring. Refer to the wiring diagram and attach the fixture's wires to the power supply wires from the junction box. Connect Hot to Hot (transparent wire with black inner thread, black, or smooth wire) Neutral to Neutral (transparent wire with white inner thread, white, or ribbed wire), and Ground to Ground (transparent wire with green inner thread, green wire, or copper). Twist the ends of the wire pairs together, and then twist on a wire connector. Make sure all twists are in the same direction. If there is no house ground wire coming from the junction box, locate ground screw (E) on the mounting bracket/mounting strap and wrap the fixture's ground wire around the ground screw. Use a screwdriver to tighten the top of ground screw (E) onto the wires and into the mounting bracket/mounting strap. Tuck the wires into the junction box.

FINISHING THE INSTALLATION

4. Place the fixture's backplate (F) over mounting screws (A) so that they protrude through the holes in the front of the backplate. Thread deco nuts (G) onto mounting screws (A). Twist deco nut (G) until the backplate of the fixture is snug against the wall.

5. Slide shades (I) over the sockets (H) and secure in place using socket rings (J). Insert the tool (L) into the socket rings (J) and finish tightening.

Install light bulbs (not included) in accordance with the fixture's specifications. Do not exceed the maximum.

Your installation is now complete. Turn on the power and test the fixture.

CLEANING TIPS

Treat the fixture gently! Regular cleaning will reduce the need for deep cleaning. For regular cleaning, turn off the light and wipe down the fixture with a clean lint-free cotton or microfiber cloth. Never spray cleaner directly onto the fixture.

GOLDEN LIGHTING