GERBER

D304134
Lemora™
Two Handle Widespread Lavatory Faucet

SPECIFICATIONS

Features/Benefits

- 1.2 gpm (4.5 L/min) Max Flow @ 60 psi with Laminar Water Stream
- Alternative Flow Rates Available with Spray Water Stream
- 1.0 gpm (3.8 L/min) When Used with DA613074N Aerator
- 0.5 gpm (1.9 L/min) When Used with DA613075N Aerator
- 4 5/16" Spout Height, 5 7/16" Spout Reach
- Ceramic Disc Cartridge
- Includes Metal Touch-Down Drain Assembly
- 3-Hole Mount
- 6"- 12" Installation
- Optional Temperature Indicators Included

Available Color/Finishes

Chrome

Please see gerberonline.com or current price list for available finishes.
Finish is defined by additional suffix.

Mount Type

6"-12"

Standards & Certifications

NSF/ANSI 372

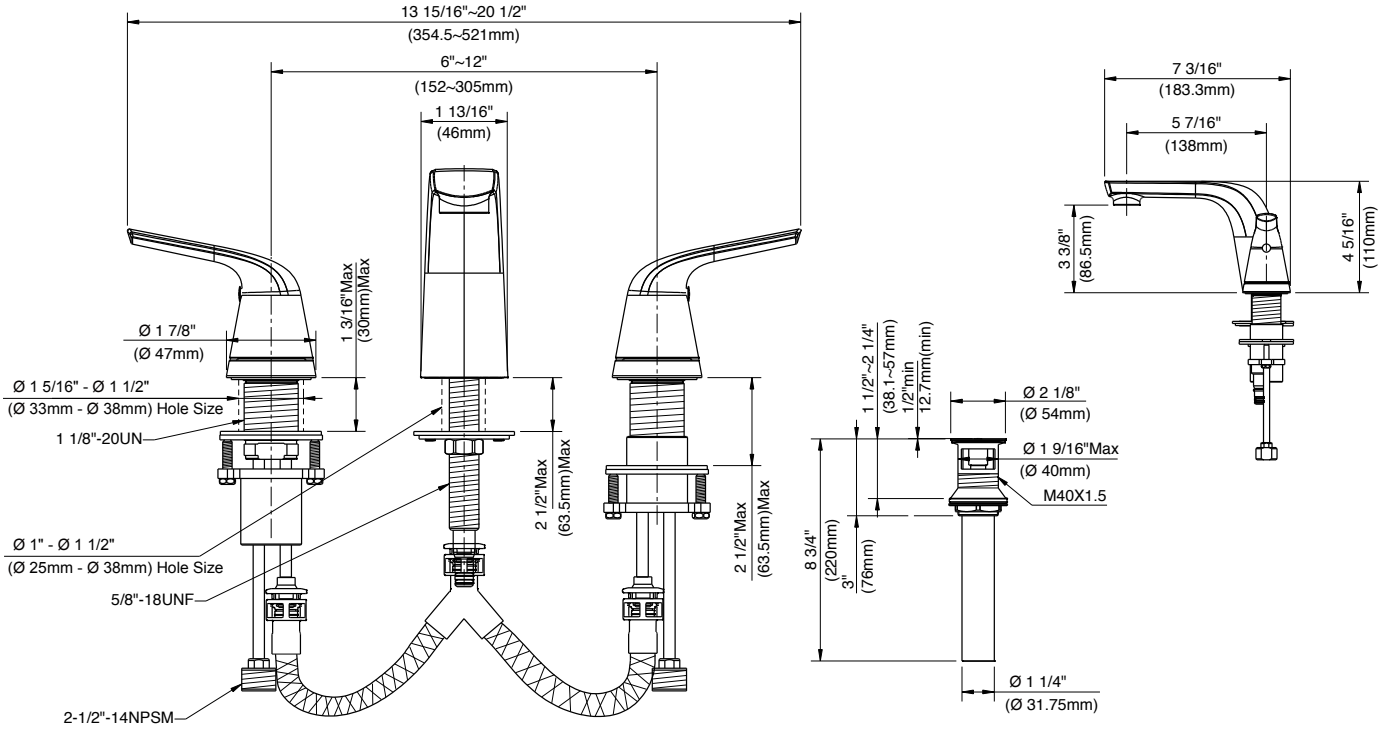

Submittal Information:

Name: _____ Contractor: _____

Location: _____ Contact #: _____