fluid Innovative fixtures for life

SPECIFICATIONS

Customer Service: 1-800-460-7019
www.fluidfaucets.com

Sustainable Solutions

fluid 18” Switch Retro-fit Shower System with 16” Shower Arm

Model: F9516

Includes:

FP933002 18” Main Shower Body Pipe
FP900216 16” Shower Arm

Specifications

- Metal construction for durability and reliability
- Designed as part of a new installation or a retrofit to replace an existing installed shower arm
- Wall-mounted shower diverter system with round escutcheons
- Switch between hand shower and showerhead via the built-in diverter
- Swivel 16” long shower arm with locking function
- Check valve installed for backflow prevention
- Hose elbow connector can go left or right
- For use with fluid showerheads, hand showers and Shower hoses, sold separately
- Rough-in mixing valve is not included
- Can be installed either by drilling into shower wall or a drill-free method with waterproof glue.
- A large pair of 65mm escutcheons is available if needed for covering larger holes in the finished wall in retrofit situations, (sold separately).

Finish

- CP (Polished Chrome)
- PVD-BN (PVD-Brushed Nickel)
- MB (Matte Black)

Codes and Standards

- ANSI/ASME A112.18.1
- CSA B125.1
- IAPMO / cUPC Listed

Warranty
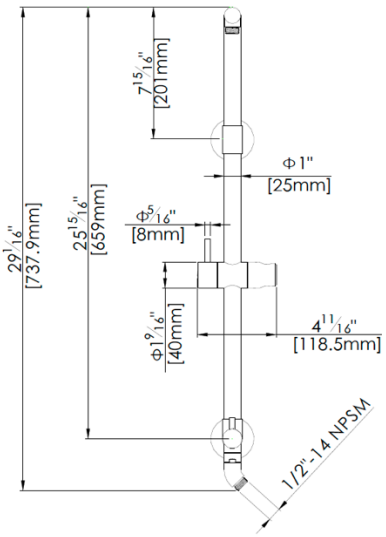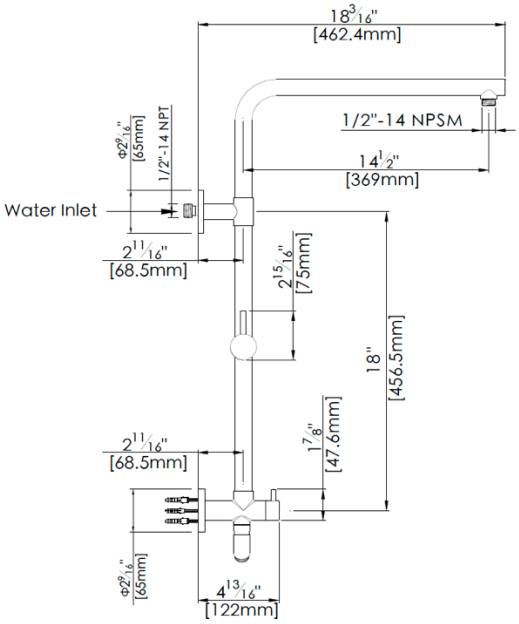
- Limited Lifetime Faucet Warranty against material and manufacturing defects for residential use.
- 2 Year Limited Warranty on all industrial, commercial