ELEGANT
FURNITURE & LIGHTING™

Installation manual for

1219D13AS/RC、1219D13BK/RC、1219D13BR/RC

Dimensions : D13″ H16″ L3
Collection : NORDIC
Bulb Type : E12 (Candelabra) bulb not included
Lamp Frame Weight : 6.53 LBS
Total Weight : 13.23 LBS

Thank you for choosing our product(s).
Our Company is actively involved in every step of the production.
Our product(s) are designed to be utilized for every application that graces your home or business.
We pride ourselves in providing the most prompt and courtesy service to all of the valued customers.
Please find the enclosed detailed instruction and read carefully for proper installation. If you have any questions, our professional customer service team is committed to assisting you, please call our toll free HOTLINE AT:

UL C UL US

SAFETY

Warning: MAKE SURE THE ELECTRICITY TO THE WIRES YOU ARE WORKING ON IS SHUT OFF.BY EITHER REMOVING THE FUSE OR TURNING OFF THE CIRCUIT BREAKER.

CAUTION

- Before assembling the lighting fixture, please read all instructions carefully.
- All frame & crystal components are fragile, please handle with care.
- Required supply circuit : 110 - 130V/60Hz
- Labeled wires are “L” for live wire, “N” for neutral wire, “E” for ground wire.
- Never install fixture on damp ceiling, the room should be dry and well ventilated
- All electrical components must be installed by a licensed electrician and in accordance with the National Electrical Code and the appropriate local electrical codes.

Unpack the Package

Please open the box carefully and check all the items are inside the box. If you have any installation, assembling and missing parts questions.
where you purchase from and any other relevant information ready, our customer service team will provide comprehensive and worry free service to our valued customers.

Frame Assembly Diagram

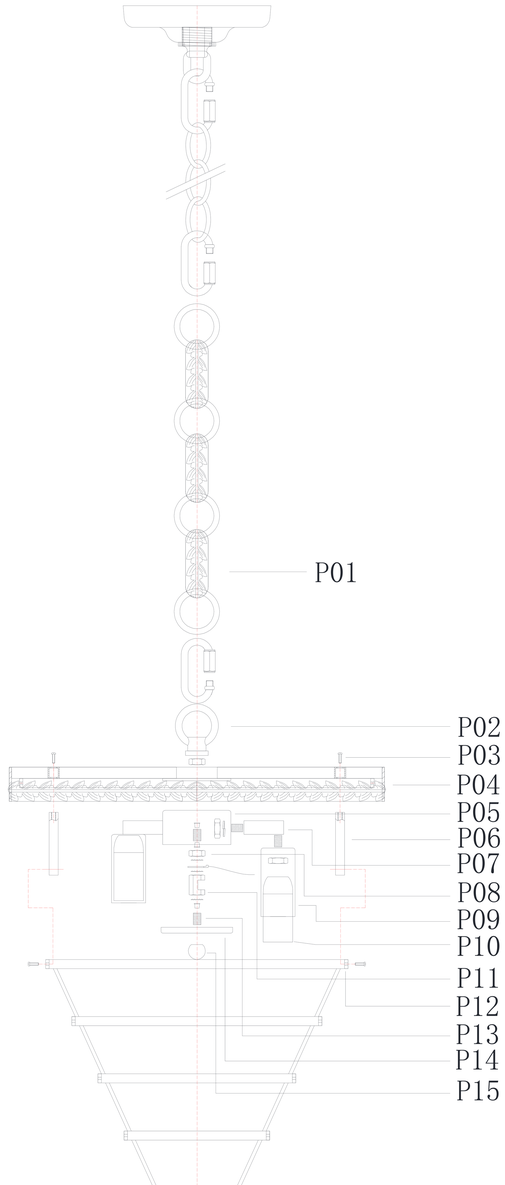

1219D13 D13″ H16″ L3

Step 1

Please use the partslist to ensure you are not missing any parts.

1219D13

PARTS LIST

Part	Picture	Description	Parts number	Qty	Check list
ZA		Canopy cover 5″ (Canopy part)	CP40R51L2	1	
ZB		Crossbar 4″ (Canopy part)		1	
ZC		Canopy ring (Canopy part)		1	
ZD		Canopy lock (Canopy part)		1	
ZE		L47″CHAIN04P Plain Design	CHAIN04P	1	
ZF		ground wire		1	
ZG		junction caps		2	
ZH		Power Cord 12'/SPT-1-18# Clear/Gold		1	
P01		Chain 2.5″*0.95' (Canopy part)		1	
P02		1.5″H2.0″ Quick link		1	
P03		Sunk Crossbar Screws		8	

1219D13 D13″ H16″ L3

Part	Picture	Description	Parts number	Qty	Check list
P04		rosette		1	
P05		Terminal Block		1	
P06		Square tube		4	
P07		Lamp arm		3	
P08		Nut		8	
P09		socket		3	
P10		Hickey		3	
P11		Double iron		1	
P12		Upper lamp frame		1	
P13		Thread pipe		8	
P14		Disk		1	
P15		finial		1	

Part	Picture	Description	Parts number	Qty	Check list
A		710-2″	RC710-2-CL-C	30	
B		710-2.5″	RC710-2.5-CL-C	72	
C		711-3.5″	RC711-3.5-CL-C	42	
D		711-4″	RC711-4-CL-C	1	

Step 2

Canopy Installation Instruction

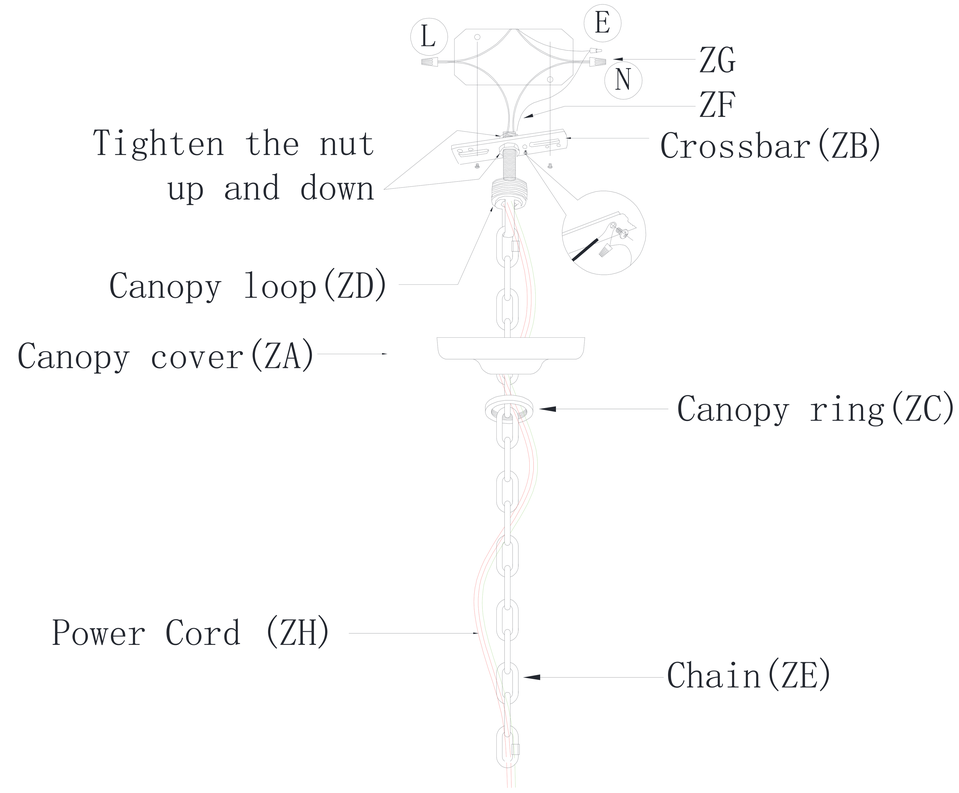

IMPORTANT:Test sockets with bulb before dressing the fixture.

1 .Attach the crossbar to the electrical box.
2 .Pass the lamp wire and ground wire through the loop,canopy ring and center hole of canopy cover.
3 .Screw2.5″ threaded pipe into the crossbar and fasten with hex-nut.
4 .Pull wires up through the nipple.
5 .Screw loop only onto threaded pipe.
6 .Hang the fixture on chain.
7 .Make the electrical connections as detailed in the drawing above.
8 .Secure the canopy cover with threaded canopy ring .

Step 3

Frame Assembly Diagram

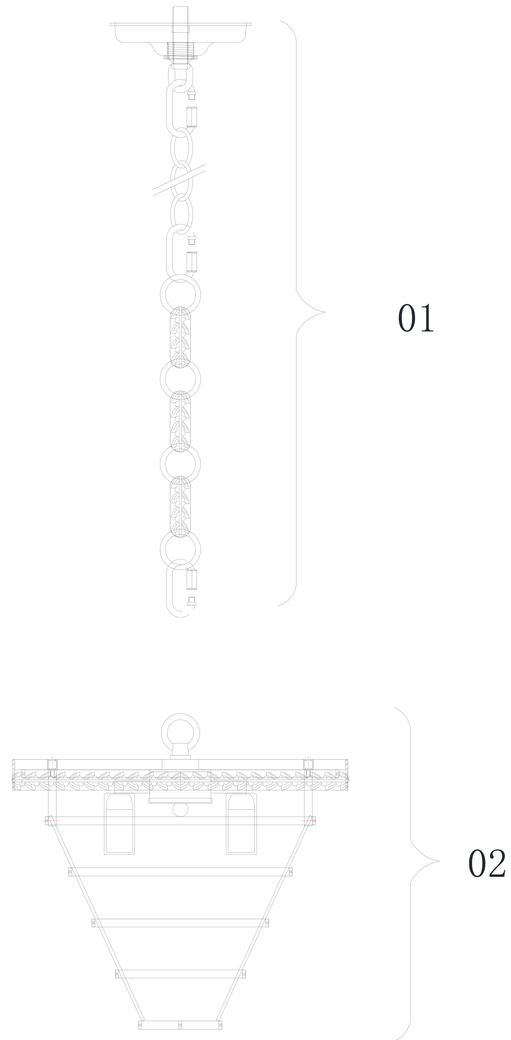

Frame Assembly Instructions

Installation:

Please read all instructions carefully. Before you proceed to install,make sure that the power supply is turned off and remains off until installation is complete. Please note that each part has been assigned a number. Please proceed in a numerical order.

1. Hang the canopy parts (01) on the Ceiling Plate.
2. Fasten the fixture loop to hang the whole fixture(02).
3. Screw the Bulb on the Lamp Holder.
4. Follow the crystal instruction to hang the crystal.

Step 4

Crystal Dressing Diagram

When dressing the chandelier with the crystals please remember to wear either rubber or cotton gloves.So as to prevent any damage or smudging on the crystals.

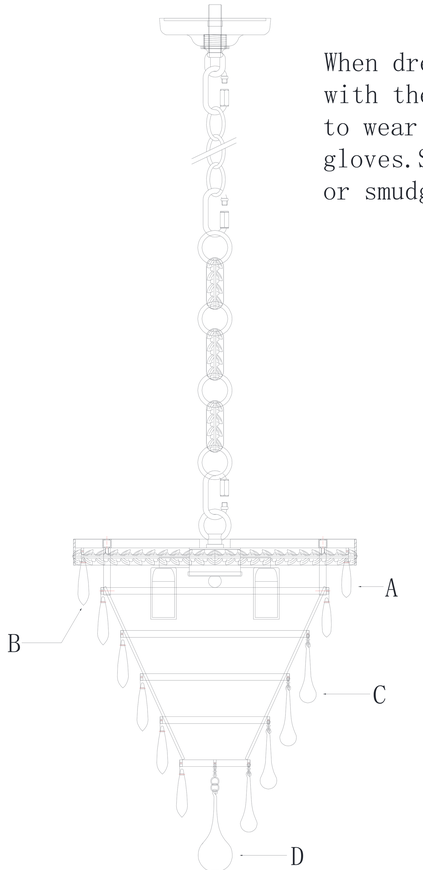

1. Hang the crystal (A) and the crystal (B) on the first circle and the second circle of the Lamp Frame as shown in the figure.
2. Hang the crystal (B) and the crystal (C) on the third circle to the sixth circle of the Lamp Frame as shown in the figure.
3. Hang the crystal (D) at the bottom of the Lamp Frame as shown in the figure.

Congratulations !

You are now done installing your Elegant Lighting fixture. Sit back and admire each crystal as it will become the statement piece for your room/house.

Thank you.

Cleaning and Maintenance of Chandelier Frame

The finish on our chandelier frames and fixture frames is protected by a durable coating of lacquer. To clean, use a clean soft, dry cloth.Do not use any metal polishes, cleaners, abrasives or any substance which could remove the protective finish. Failure to follow these instructions automatically voids the guarantee.

Cleaning and Maintenance of Crystals

Wet a soft cotton fabric in clean warm water and wipe gently, then polish with a dry soft cotton fabric.

To Order Crystal Replacement Parts

Should you require replacement crystals or pins (the metal connectors attaching the crystals), contact the store where the product was purchased or contact us . For ease of ordering, you may use the original crystal trimming instructions provided with this product and circle the items you wish to order, indicating the quantity by writing the number needed adjacent to the circle . You will be contacted with prices prior toshipment. All orders must be pre-paid.

Elegant Lighting Warranty

The finish and frame of your new chandelier or fixture are warranted for a period of one (1) year from the date of purchase. Our company will, at its option, repair or replace any frame that has a defect in the materials or workmanship during the warranty period. All crystals are guaranteed for their original quality during the life of the chandelier. Breakage is not covered by this warranty.

To make a claim under this warranty, contact our customer service department.
A written return authorization form will be sent to you with specific instructions.

1219D13 D13″ H16″ L3

Returns and Conditions of Warranty

Returns must be pre-authorized by contacting our customer service department .Returns will only be accepted with a written return merchandise authorization and return shipping charges pre-paid. We reseserve the right to inspect all returned merchandise to fully determine the nature of any defect. This guarantee shall not apply to any product that has been changed, altered or otherwise modified, nor shall it apply to any product that has been repaired or altered by anyone other than a pre-authorized facility. We will not be responsible for any breakage or damages incurred during transit, nor for crystal parts or metal frame part that have been subject to misuse, negligence, accident or inappropriate handling. Also, we will not be held responsible for damage incurred during improper installation or wiring by others, nor for damages resulting from a failure to follow the recommended maintenance or installation procedures. This guarantee is issued in lieu of any and all other guaranteed or warrantee, whether written or implied and any and all other obligations or liabilities. Further, we neither authorize nor permit any other person or firm to assume for us, any liability in connection with the sale of our products.

Version: 6/22/2020